LT. 37

ORIGINAL—NOT TO BE REMOVED FROM DEPARTMENT OF LAND ADMINISTRATION

Transfer G541179

Volume 2064 Folio 809

WESTERN AUSTRALIA

REGISTER BOOK
VOL. FOL.
CT 2110 971

CERTIFICATE OF TITLE

UNDER THE "TRANSFER OF LAND ACT, 1893" AS AMENDED

Page 1 (of 2 pages) VOL. 2110 FOL. 971

I certify that the person described in the First Schedule hereto is the registered proprietor of the undermentioned estate in the undermentioned land subject to the easements and encumbrances shown in the Second Schedule hereto.

Dated 28th July, 1997

REGISTRAR OF TITLES

REGISTRAR OF TITLES WESTERN AUSTRALIA

ESTATE AND LAND REFERRED TO

Estate in fee simple in Wundowie Lot 176, delineated on the map in the Third Schedule hereto, limited however to the natural surface and therefrom to a depth of 12.19 metres.

FIRST SCHEDULE (continued overleaf)

Jeremy John Parker and Louisa Jane Dyer both of 176 Zamia Terrace, Wundowie, as joint tenants.

SECOND SCHEDULE (continued overleaf)

1. MORTGAGE G541180 to Keystart Loans Ltd. Registered 28.7.97 at 14.56 hrs.

THIRD SCHEDULE

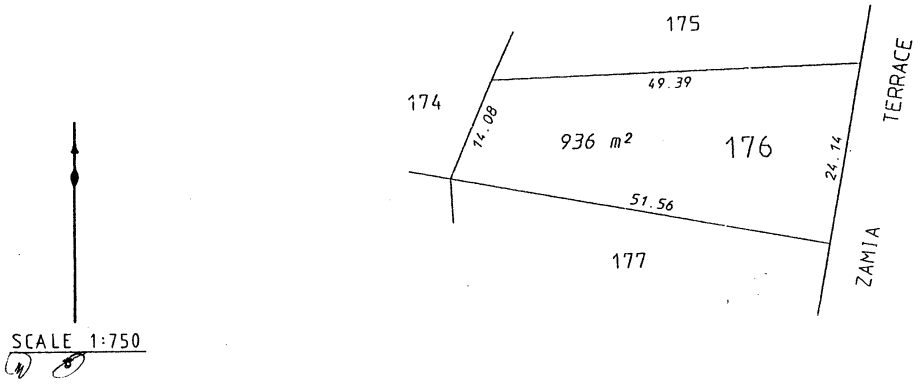

NOTE: ENTRIES MAY BE AFFECTED BY SUBSEQUENT ENDORSEMENTS.

PERSONS ARE CAUTIONED AGAINST ALTERING OR ADDING TO THIS CERTIFICATE OR ANY NOTIFICATION HEREON

Superseded - Copy for Sketch Only

LANDGATE COPY OF ORIGINAL NOT TO SCALE 25/06/2026 11:57 AM Request number: 70028251

Landgate
www.landgate.wa.gov.au

Superseded - Copy for Sketch Only

LT. 37

FIRST SCHEDULE (continued) NOTE: ENTRIES MAY BE AFFECTED BY SUBSEQUENT ENDORSEMENTS

REGISTERED PROPRIETOR	INSTRUMENT NATURE	INSTRUMENT NUMBER	REGISTERED	TIME	SEAL	CERT. OFFICER

SECOND SCHEDULE (continued) NOTE: ENTRIES MAY BE AFFECTED BY SUBSEQUENT ENDORSEMENTS

INSTRUMENT NATURE	INSTRUMENT NUMBER	PARTICULARS	REGISTERED	TIME	SEAL	CERT. OFFICER	CANCELLATION	NUMBER	REGISTERED OR LODGED	SEAL	CERT. OFFICER

CERTIFICATE OF TITLE VOL. 2110 FOL. 971

LANDGATE COPY OF ORIGINAL NOT TO SCALE 25/06/2026 11:57 AM Request number: 70028251
www.landgate.wa.gov.au
Landgate