contract for sale of land or strata title by offer and acceptance

REIWA
REAL ESTATE INSTITUTE OF WESTERN AUSTRALIA
APPROVED BY THE REAL ESTATE INSTITUTE OF WESTERN AUSTRALIA (INC.)
COPYRIGHT © REIWA 2025
FOR USE BY REIWA MEMBERS
000011216488
firstnational Genesis

NOTICE: Contracts must be lodged with the Office of State Revenue for duty assessment within two (2) months of the date the last person executes the Contract
WARNING - If the Buyer is not an Australian Citizen or Permanent Resident or a New Zealand Citizen then FIRB approval (and a special condition to this Contract) may be required and additional Duty will be payable. Any non Australian resident will need to give the ATO notice of their purchase within 30 days after settlement.
WARNING - A Withholding Amount **may** apply to this Contract (see 2022 General Condition 3.7).
WARNING - If GST is relevant to this transaction then the relevant GST provision should be outlined in the Special Conditions or in an attached GST Annexure, which forms part of this Contract.

TO: BJK Genesis Property Pty Ltd
Address 6/160 Scarborough Beach Road
Suburb Mount Hawthorn State WA Postcode 6016
As Agent for the Seller / ~~Buyer~~

THE BUYER
Name
Address
Suburb State Postcode
Name
Address
Suburb State Postcode
EMAIL: The Buyer consents to Notices being served at:

OFFERS TO PURCHASE the Land and Property Chattels set out in the Schedule ("Property") with vacant possession unless stated otherwise in the Special Conditions at the Purchase Price on the terms set out in the Schedule, the Conditions and Special Conditions as:

☐ Sole owner ☐ Joint Tenants ☐ Tenants in Common specify the undivided shares

SCHEDULE

The **Property** at:
Address 14 Zamia Terrace
Suburb Wundowie State WA Postcode 6560
Lot 176 Deposited/~~Survey/Strata/Diagram~~/Plan 206026 Whole / ~~Part~~ Vol 2110 Folio 971
A **deposit** of $ of which $ 0 is paid now and $ to be paid within 7 days of acceptance
to be held by First National Real Estate Genesis
("the Deposit Holder"). The balance of the Purchase Price to be paid on the Settlement Date.

Purchase Price
Settlement Date
Property Chattels including All fixed floor coverings, light fittings, window treatments and all pool equipment as inspected and where applicable.

GST WITHHOLDING

1. Is this Contract concerning the taxable supply of new residential premises or potential residential land as defined in the GST Act? ☐ YES ☑ NO
2. If NO is ticked or no box is ticked (in which case the answer is deemed to be NO), then the Buyer is not required to make a payment under section 14-250 of the Taxation Administration Act 1953 (Cth).
3. If YES is ticked, then the 'GST Withholding Annexure' should be attached to this Contract.

FINANCE CLAUSE IS APPLICABLE

LENDER/
MORTGAGE BROKER (NB. If blank, can be any)
LATEST TIME: 4pm on:
AMOUNT OF LOAN:
SIGNATURE OF BUYER

FINANCE CLAUSE IS NOT APPLICABLE

Signature of the Buyer if Finance Clause IS NOT applicable

NOTE: IF THIS DOCUMENT IS ON SEPARATE PAGES OR IS TO BE FAXED THEN ALL PARTIES SHOULD SIGN ALL PAGES.

REIWA
REAL ESTATE INSTITUTE OF WESTERN AUSTRALIA
APPROVED BY THE REAL ESTATE INSTITUTE OF WESTERN AUSTRALIA (INC.)
COPYRIGHT © REIWA 2025
FOR USE BY REIWA MEMBERS
000011216488
firstnational Genesis

CONDITIONS

1. SUBJECT TO FINANCE

If the Buyer signs the "Finance Clause is not Applicable" box in the Schedule, or if no information is completed in the 'Finance Clause is Applicable' box in the Schedule, then this Clause 1 does not apply to the Contract.

If any information is completed in or the Buyer signs the 'Finance Clause is Applicable' box in the Schedule then this Clause 1 applies to the Contract.

1.1 Buyer's Obligation to Apply for Finance and Give Notice to the Seller

(a) The Buyer must:
  (1) immediately after the Contract Date make a Finance Application to a Lender or a Mortgage Broker using, if required by the Lender, the Property as security; and
  (2) use all best endeavours in good faith to obtain Finance Approval.

(b) If the Buyer does not comply with Clause 1.1(a) or 1.1(c)(1) then the Contract will not come to an end pursuant to clause 1.2 and the Buyer may not terminate the Contract under Clause 1.3. The rights of the Seller under this Clause 1.1 will not be affected if the Buyer does not comply with Clause 1.1.

(c) The Buyer must immediately give to the Seller or Seller Agent:
  (1) an Approval Notice if the Buyer obtains Finance Approval; or
  (2) a Non Approval Notice if the Finance Application is rejected;

at any time while the Contract is in force and effect.

1.2 No Finance Approval by the Latest Time: Non Approval Notice Given

This Contract will come to an end without further action by either Party if on or before the Latest Time:

(a) the Finance Application has been rejected; or

(b) a Non Approval Notice, is given to the Seller or Seller Agent.

1.3 No Finance Approval by the Latest Time: No Notice Given

If by the Latest Time the Seller or Seller Agent has not been given:

(a) an Approval Notice; or

(b) a Non Approval Notice;

then this Contract will be in full force and effect unless and until either the Seller gives written Notice of termination to the Buyer or the Buyer terminates this Contract by giving a Non-Approval Notice to the Seller or Seller Agent.

1.4 Finance Approval: Approval Notice Given

If by the Latest Time, or if Clause 1.5 applies, before the Contract is terminated:

(a) Finance Approval has been obtained; or

(b) an Approval Notice has been given to the Seller or Seller Agent;

then this Clause 1 is satisfied and this Contract is in full force and effect.

1.5 Notice Not Given by Latest Time: Sellers Right to Terminate

If by the Latest Time an Approval Notice or a Non Approval Notice has not been given to the Seller or Seller Agent then at any time until an Approval Notice or a Non Approval Notice is given, the Seller may terminate this Contract by written Notice to the Buyer.

1.6 Buyer Must Keep Seller Informed: Evidence

(a) If requested in writing by the Seller or Seller Agent the Buyer must:
  (1) advise the Seller or Seller Agent of the progress of the Finance Application; and
  (2) provide evidence in writing of:
    (i) the making of a Finance Application in accordance with Clause 1.1 (a) and of any loan offer made, or any rejection; and/or
    (ii) in the case of any Finance Application made to a Mortgage Broker, any "preliminary assessment" of the suitability of the proposed credit contract provided to the Buyer by the Mortgage Broker pursuant to section 116 of the Credit Protection Act; and
  (3) if applicable, advise the Seller or Seller Agent of the reasons for the Buyer not accepting any loan offer.

(b) If the Buyer does not comply with the request within 2 Business Days then the Buyer authorises the Seller or Seller Agent to obtain from the Lender and/or Mortgage Broker the information referred to in Clause 1.6(a).

1.7 Right To Terminate

If a Party has the right to terminate under this Clause 1, then:

(a) termination must be effected by written Notice to the other Party;

(b) Clauses 23 and 24 of the 2022 General Conditions do not apply to the right to terminate;

(c) upon termination the Deposit and any other monies paid by the Buyer must be repaid to the Buyer;

(d) upon termination neither Party will have any action or claim against the other for breach of this Contract, except for a breach of Clause 1.1 by the Buyer.

1.8 Waiver

The Buyer may waive this Clause 1 by giving written Notice to the Seller or Seller Agent at any time before the Latest Time, or if Clause 1.5 applies, before the Contract is terminated. If waived this Clause is deemed satisfied.

1.9 Definitions

In this Clause:

Amount of Loan means the amount referred to in the Schedule, any lesser amount of finance referred to in the Finance Application or any lesser amount of finance acceptable to the Buyer. If the amount referred to in the Schedule is blank, then the amount will be an amount equivalent to the Purchase Price.

Approval Notice means a statement in writing given by the Buyer, a Lender or a Mortgage Broker to the Seller, or Seller Agent to the effect that Finance Approval has been obtained.

Credit Protection Act means the *National Consumer Credit Protection Act, 2009* (Cwth).

Finance Application means an application made by or on behalf of the Buyer:

(a) to a Lender to lend any monies payable under the Contract: or

(b) to a Mortgage Broker to facilitate an application to a Lender.

Finance Approval means a written approval by a Lender of the Finance Application, a written offer to lend or a written notification of an intention to offer to lend made by a Lender:

(a) for the Amount of Loan;

(b) which is unconditional or subject to terms and conditions:
  (1) which are the Lender's usual terms and conditions for finance of a nature similar to that applied for by the Buyer; or
  (2) which the Buyer has accepted by written communication to the Lender, but a condition which is in the sole control of the Buyer to satisfy will be treated as having been accepted for the purposes of this definition; or
  (3) which, if the condition is other than as referred to in paragraphs (1) and (2) above includes:
    (i) an acceptable valuation of any property;
    (ii) attaining a particular loan to value ratio;
    (iii) the sale of another property; or
    (iv) the obtaining of mortgage insurance;

  and has in fact been satisfied.

Latest Time means:

(a) the time and date referred to in the Schedule; or

(b) if no date is nominated in the Schedule, then 4pm on the day falling 15 Business Days after the Contract Date.

Lender means any bank, building society, credit union or other institution which makes loans and in each case carries on business in Australia.

Mortgage Broker means means a holder of an Australian Credit Licence pursuant to section 35 of the Credit Protection Act or a credit representative pursuant to sections 64 or 65 of that legislation.

Non Approval Notice means:

(a) advice in writing given by the Buyer or a Lender to the Seller, or Seller Agent to the effect that the Finance Application has been rejected or Finance Approval has not been obtained; or

(b) advice in writing from a Mortgage Broker to the Seller or Seller Agent to the effect that:
  (1) (i) they have made inquiries about the Buyer's requirements and objectives under this Contract;
    (ii) they have conducted a "preliminary assessment" pursuant to sections 116 and 117 of the Credit Protection Act of the suitability of the credit contract proposed for the Buyer arising from the Finance Application; and
    (iii) they have assessed that proposed credit contract as being unsuitable for the Buyer; or
  (2) the Finance Application to a Lender has been rejected.

2. Acceptance of an offer by one Party to the other Party will be sufficiently communicated by the accepting Party to the other Party if verbal or written notification is given by the accepting Party or their Representative or Real Estate Agent that the accepting Party has signed the Contract.
3. The 2022 General Conditions together with the Annexure of Changes to the 2022 General Conditions Caused by changes to the transfer of Land Act 1893 are incorporated into this Contract so far as they are not varied by or inconsistent with the Conditions or Special Conditions of this Contract.
4. The parties consent to the information in this Contract being used/disclosed by REIWA and the Seller Agent in accordance with the privacy collection notices pursuant to the Australian Privacy Principles that appear on the REIWA and Seller Agent's websites.

SPECIAL CONDITIONS

1.The Buyer is aware that they will be required, prior to settlement, to complete and lodge a Foreign Transfer Duty Declaration which may result in the payment by them of Foreign Transfer Duty which is not included in the purchase price. The buyer acknowledges they have made all necessary enquiries to satisfy themselves about their responsibilities regarding Foreign Transfer Duty.

2. The buyer is aware the property may contain asbestos building materials.

SPECIAL CONDITIONS - Continued

BUYER [If a corporation, then the Buyer executes this Contract pursuant to the Corporations Act.]

Signature	Date	Signature	Date
Signature	Date	Signature	Date

THE SELLER (FULL NAME AND ADDRESS) ACCEPTS the Buyer's offer

Name Justin Michael Pezzali

Address 4 Mauravillo Boulevard

Suburb Wundowie State WA Postcode 6560

Name Sharnee Leanne Drury

Address 4 Mauravillo Boulevard

Suburb Wundowie State WA Postcode 6560

EMAIL: The Seller consents to Notices being served at:

[If a corporation, then the Seller executes this Contract pursuant to the Corporations Act.]

Signature	Date	Signature	Date
Signature	Date	Signature	Date

RECEIPT OF DOCUMENTS

The Buyer acknowledges receipt of the following documents:

1. This offer and acceptance
2. Strata disclosure & attachments (if strata)
3. 2022 General Conditions
4. Certificate of Title
5. Annexure of changes to General Conditions (form 198)

Signature	Signature

RECEIPT OF DOCUMENTS

The Seller acknowledges receipt of the following documents:

1. This offer and acceptance
2. 2022 General Conditions
3. Annexure of changes to General Conditions (form 198)

Signature	Signature

CONVEYANCER (Legal Practitioner/Settlement Agent)

The Parties appoint their Representative below to act on their behalf and consent to Notices being served on that Representative's email address.

	BUYER'S REPRESENTATIVE	SELLER'S REPRESENTATIVE
Name		
Signature		

COPYRIGHT

The copyright of this Contract by Offer and Acceptance is the property of the Real Estate Institute of Western Australia (Inc.) ("REIWA") and neither the form nor any part of it may be used or reproduced by any method whatsoever or incorporated by reference or in any manner whatsoever in any other document without the consent of the REIWA. 01/25

APPROVED BY
THE REAL ESTATE INSTITUTE
OF WESTERN AUSTRALIA (INC.)
COPYRIGHT © REIWA 2023
FOR USE BY REIWA MEMBERS
000011216488

ANNEXURE OF CHANGES TO THE 2022 GENERAL CONDITIONS CAUSED BY CHANGES TO THE TRANSFER OF LAND ACT 1893

LANDGATE WILL NOT ISSUE, OR REQUIRE DUPLICATE CERTIFICATES OF TITLE FOR LAND TO BE PRODUCED, FROM THE 7TH AUGUST 2023, CONSEQUENTLY THE PARTIES AGREE TO VARY THE 2022 GENERAL CONDITIONS IN THE FOLLOWING MANNER:

	CONDITION	**CHANGES**
1.	3.10(a)	Delete subclause (1).
2.	3.11	Delete clause 3.11.
3.	26.1 definition of "*Duplicate Certificate of Title*"	Delete the definition of *"Duplicate Certificate of Title".*

Buyer

Signature _____

Name _____

Date _____

Signature _____

Name _____

Date _____

Signature _____

Name _____

Date _____

Signature _____

Name _____

Date _____

Seller

Signature _____

Name Justin Michael Pezzali

Date _____

Signature _____

Name Sharnee Leanne Drury

Date _____

Signature _____

Name _____

Date _____

Signature _____

Name _____

Date _____

AUSTRALIAN STANDARD PRE-PURCHASE INSPECTION FOR MAJOR STRUCTURAL DEFECTS

REIWA REAL ESTATE INSTITUTE OF WESTERN AUSTRALIA
APPROVED BY THE REAL ESTATE INSTITUTE OF WESTERN AUSTRALIA (INC.)
COPYRIGHT © REIWA 2024
FOR USE BY REIWA MEMBERS
000010996822
firstnational Genesis

ANNEXURE A

This annexure forms part of the Contract for the Sale of Land or Strata Title for the Property at

14 Zamia Terrace, Wundowie WA 6560

NOTE - THIS ANNEXURE ONLY APPLIES TO, AND IS LIMITED TO, MAJOR STRUCTURAL DEFECTS PURSUANT TO APPENDIX "A" OF THE STANDARD AND NOT OTHER DEFECTS, MAINTENANCE OR OTHER SAFETY ISSUES.

1. The Buyer may at their expense obtain a written Report on any Major Structural Defects of the residential building and of the following described areas Located upon the Property ("**Building**"). If nothing is completed in the blank space then the Building will be the residential Building only.

2. The Buyer must serve a copy of the Report on the Seller, Seller Agent or Seller Representative by 4PM on: *complete (a) or (b)

(a*) ____/____/____ **OR** (b*) 14 days after acceptance ("Date")

3. If the Buyer, and Seller Agent or Seller or Seller Representative do not receive the Report before the Date then the Buyer will be deemed to have waived the benefit of this Annexure. Time is of the essence.
4. If the Report identifies Major Structural Defects to the Property's Building, the Buyer may at any time but no later than three (3) Business Days after the Date serve a Major Structural Defects Notice on the Seller, Seller Agent or Seller Representative giving the Seller five (5) Business Days to agree to remedy the Major Structural Defects.
5. If the Seller elects in writing to remedy the Major Structural Defects in the Major Structural Defects Notice then the Settlement Date will be delayed until the later of: (a) three (3) Business Days after the Seller's Work is completed as certified by the Seller's Builder and (b) the Settlement Date.
6. The Seller must do the Work expeditiously and in good and workmanlike manner through a Builder and provide evidence to the Buyer of completion of the Work.
7. If, prior to the Seller commencing Work, the Seller and Buyer wish to agree and do agree an amount to be paid by the Seller to the Buyer then the amount will be deducted from the Purchase Price at Settlement and the Seller will not undertake the Work.
8. If the Seller does not agree in writing to remedy Major Structural Defects within five (5) Business Days from when the Major Structural Defects Notice was served on the Seller, Seller Agent or Seller Representative then:
   (a) At any time within a further Five (5) Business Days after (1) that period ending (if no notice is given by the seller); or (2) the date notice in writing is given by the Seller to the Buyer, the Buyer may give notice in writing to the Seller, Seller Agent or Seller Representative terminating the Contract and the Deposit and other monies paid will be repaid to the Buyer;
   (b) if the Buyer does not terminate the Contract pursuant to this clause 8, then this Annexure ceases to apply and the Contract continues unaffected by this Annexure.
9. In this Annexure:

9.1 "Builder" means a registered building service contractor (as defined in the *Building Services (Registration) Act 2011*WA) qualified to remedy the matters set out in the Major Structural Defects Notice.

9.2 "Consultant" means an independent inspector qualified and experienced in undertaking pre-purchase property inspections to ascertain Major Structual Defects.

9.3 "Date" means the date inserted or calculated in clause 2. If nothing is inserted in clause 2 then the Date will be five (5) Business Days from the later of (i) the Contract Date; or (ii) the Latest Time for Financial Approval (if any).

9.4 "Major Structural Defects" means a fault or deviation from the intended structural performance of a building element and is a major defect to the building structure of sufficient magnitude where rectification has to be carried out in order to avoid unsafe conditions, loss of utility, or further deterioration of the building structure. Major Structural Defects does not include any non-structural element, e.g., roof plumbing and roof covering, general gas, water and sanitary plumbing, electrical wiring, partition walls, cabinetry, windows, doors, trims, fencing, minor structures, non-structural damp issues, ceiling linings, floor coverings, decorative finishes such as plastering, painting, tiling etc., general maintenance, or spalling of masonry, fretting of mortar or rusting of primary structural elements.

9.5 "Major Structural Defects Notice" means a Notice in writing from the Buyer to the Seller to provide the Seller with the opportunity to agree to rectify the Major Structural Defects that the Buyer requires to be rectified.

9.6 "Report" means the report performed in accordance with Appendix A of the Standard by a ~~Consultant~~ Registered Builder. It is not a special purpose report, nor an all-encompassing report dealing with every aspect of the Property. The Report should only be a reasonable attempt to identify Major Structural Defects to the Building structure pursuant to Appendix "A of the Standard. The presence of defects will only be relevant in this Annexure when the defects are a Major Structural Defect.

9.7 "Standard" means Australian Standard AS 4349-2007 (as amended from time to time) Inspections of buildings Part 1: Pre-purchase Structural Inspection - Residential buildings).

9.8 "Work" means the work required to rectify the Major Structural Defects set out in the Major Structural Defects Notice.

9.9 Words not defined in this Annexure have the same meaning as defined in the Standard or the 2022 General Conditions.

BUYER SIGNATURE	BUYER SIGNATURE	SELLER SIGNATURE	SELLER SIGNATURE

BUYER SIGNATURE	BUYER SIGNATURE	SELLER SIGNATURE	SELLER SIGNATURE

AUSTRALIAN STANDARD PRE-PURCHASE INSPECTION FOR TIMBER PESTS

REIWA REAL ESTATE INSTITUTE OF WESTERN AUSTRALIA
APPROVED BY THE REAL ESTATE INSTITUTE OF WESTERN AUSTRALIA (INC.)
COPYRIGHT © REIWA 2022
FOR USE BY REIWA MEMBERS
000010996841
firstnational Genesis

ANNEXURE B

This annexure forms part of the Contract for the Sale of Land or Strata Title for the Property at

14 Zamia Terrace, Wundowie WA 6560

1. The Buyer may at their expense obtain a non-invasive written Report on any Timber Pest Activity or Damage of the residential building and of the following described areas Located upon the Property ("**Building**"). If nothing is completed in the blank space then the Building will be the residential Building only.

   This Annexure does not apply to: (a) any Activity or Damage outside the Building; (b) any comments in the Report about conditions conducive to or susceptibility to Timber Pests; or (c) recommendations for further investigations.

2. The Buyer must serve a copy of the Report on the Seller, Seller Agent or Seller Representative by 4PM on: *complete (a) or (b)

   (a*) ____ / ____ / ____ **OR** (b*) 14 days after acceptance ("Date")

3. If the Buyer, and Seller, Seller Agent or Seller Representative do not receive the Report before the Date then the Buyer will be deemed to have waived the benefit of this Annexure. Time is of the essence.
4. If the Report identifies Activity on, or Damage to, the Building, the Buyer may at any time within three (3) Business Days after the Date serve a Timber Pest Notice on the Seller, Seller Agent or Seller Representative giving the Seller Five (5) Business Days to agree to Eradicate and/or Repair.
5. If the Seller elects in writing to Eradicate and/or Repair pursuant to the Timber Pest Notice then the Settlement Date will be delayed until the later of: (a) three (3) Business Days after the Seller's Work is completed as certified by, the Seller's Builder in relation to Repair or a Consultant in relation to Eradication or, the later of them if both are required and (b) the Settlement Date.
6. The Seller must do the Work expeditiously and in a good and workmanlike manner through (a) a Builder to Repair or (b) a Consultant to Eradicate, and provide evidence to the Buyer of completion of the Work.
7. If, prior to the Seller commencing the Work, the Seller and Buyer wish to agree and do agree an amount to be paid by the Seller to the Buyer then that amount will be deducted from the Purchase Price at Settlement and the Seller will not undertake the Work.
8. If the Seller does not agree in writing to Eradicate and/or Repair within Five (5) Business Days from when the Timber Pest Notice was served on the Seller, Seller Agent or Seller Representative then
   (a) At any time within a further Five (5) Business Days after (1) that period ending (if no notice is given by the seller); or (2) the date notice in writing is given by the Seller to the Buyer, the Buyer may give notice in writing to the Seller, Seller Agent or Seller Representative terminating the Contract and the Deposit and other monies paid will be repaid to the Buyer;
   (b) if the Buyer does not terminate the Contract pursuant to this clause 8, then this Annexure ceases to apply and the Contract continues unaffected by this Annexure.
9. In this Annexure:

9.1 "Activity" means evidence of the presence of current Timber Pests.

9.2 "Builder" means a registered building service contractor (as defined in the *Building Services (Registration) Act 2011* WA) qualified to remedy the matters set out in the Major Structural Defects Notice.

9.3 "Consultant" means an independent inspector qualified and experienced in undertaking, pre-purchase property inspections pursuant to the Standard and Eradication.

9.4 "Damage" means evidence of damage caused by Timber Pests to the Building.

9.5 "Date" means the date inserted or calculated in clause 2. If no date is inserted in clause 2 then the Date will be Five (5) Business Days from the later of: (i) the Contract Date; or (ii) the Latest Time for Finance Approval (if any).

9.6 "Eradicate" and "Eradication" mean the treatment necessary to eradicate Activity affecting the Building.

9.7 "Repair" means the Work necessary to repair any Damage.

9.8 "Report" means a report performed in accordance with the Standard by a Consultant at the Property.

9.9 "Standard" means Australian Standard AS 4349.3-2010 (as amended from time to time) Inspection of buildings Timber Pest Inspections.

9.10 "Timber Pests" means subterranean and dampwood termites, borers of seasoned timber and wood decay fungi as defined in the Standard.

9.11 "Timber Pest Notice" means a Notice in writing from the Buyer to the Seller to provide the Seller with the opportunity to agree to Eradicate and/or Repair that the Buyer requires pursuant to the Report.

9.12 "Work" means the work required to Repair pursuant to the Timber Pest Notice.

9.13 Words not defined in this Annexure have the same meaning as defined in the Standard or the 2022 General Conditions.

BUYER SIGNATURE	BUYER SIGNATURE	SELLER SIGNATURE	SELLER SIGNATURE

BUYER SIGNATURE	BUYER SIGNATURE	SELLER SIGNATURE	SELLER SIGNATURE

WESTERN AUSTRALIA

TITLE NUMBER	
Volume	Folio
2110	**971**

RECORD OF CERTIFICATE OF TITLE

UNDER THE TRANSFER OF LAND ACT 1893

The person described in the first schedule is the registered proprietor of an estate in fee simple in the land described below subject to the reservations, conditions and depth limit contained in the original grant (if a grant issued) and to the limitations, interests, encumbrances and notifications shown in the second schedule.

BGRoberts

REGISTRAR OF TITLES

REGISTRAR OF TITLES WESTERN AUSTRALIA

LAND DESCRIPTION:

LOT 176 ON DEPOSITED PLAN 206026

REGISTERED PROPRIETOR:
(FIRST SCHEDULE)

JUSTIN MICHAEL PEZZALI
SHARNEE LEANNE DRURY
BOTH OF 14 ZAMIA TERRACE WUNDOWIE WA 6560
AS JOINT TENANTS

(T P335696) REGISTERED 28/10/2022

LIMITATIONS, INTERESTS, ENCUMBRANCES AND NOTIFICATIONS:
(SECOND SCHEDULE)

1. P335697 MORTGAGE TO COMMONWEALTH BANK OF AUSTRALIA REGISTERED 28/10/2022.

Warning: A current search of the sketch of the land should be obtained where detail of position, dimensions or area of the lot is required. Lot as described in the land description may be a lot or location.

----------END OF CERTIFICATE OF TITLE----------

STATEMENTS:

The statements set out below are not intended to be nor should they be relied on as substitutes for inspection of the land and the relevant documents or for local government, legal, surveying or other professional advice.

SKETCH OF LAND:	2110-971 (176/DP206026)
PREVIOUS TITLE:	2064-809
PROPERTY STREET ADDRESS:	14 ZAMIA TCE, WUNDOWIE.
LOCAL GOVERNMENT AUTHORITY:	SHIRE OF NORTHAM

LANDGATE COPY OF ORIGINAL NOT TO SCALE 25/06/2026 11:57 AM Request number: 70028251

Landgate
www.landgate.wa.gov.au

LT. 37

ORIGINAL—NOT TO BE REMOVED FROM DEPARTMENT OF LAND ADMINISTRATION

Transfer G541179

Volume 2064 Folio 809

WESTERN AUSTRALIA

REGISTER BOOK
VOL. FOL.
CT 2110 971

CERTIFICATE OF TITLE

UNDER THE "TRANSFER OF LAND ACT, 1893" AS AMENDED

Page 1 (of 2 pages) VOL. 2110 FOL. 971

I certify that the person described in the First Schedule hereto is the registered proprietor of the undermentioned estate in the undermentioned land subject to the easements and encumbrances shown in the Second Schedule hereto.

Dated 28th July, 1997

REGISTRAR OF TITLES

REGISTRAR OF TITLES WESTERN AUSTRALIA

ESTATE AND LAND REFERRED TO

Estate in fee simple in Wundowie Lot 176, delineated on the map in the Third Schedule hereto, limited however to the natural surface and therefrom to a depth of 12.19 metres.

FIRST SCHEDULE (continued overleaf)

Jeremy John Parker and Louisa Jane Dyer both of 176 Zamia Terrace, Wundowie, as joint tenants.

SECOND SCHEDULE (continued overleaf)

1. MORTGAGE G541180 to Keystart Loans Ltd. Registered 28.7.97 at 14.56 hrs.

THIRD SCHEDULE

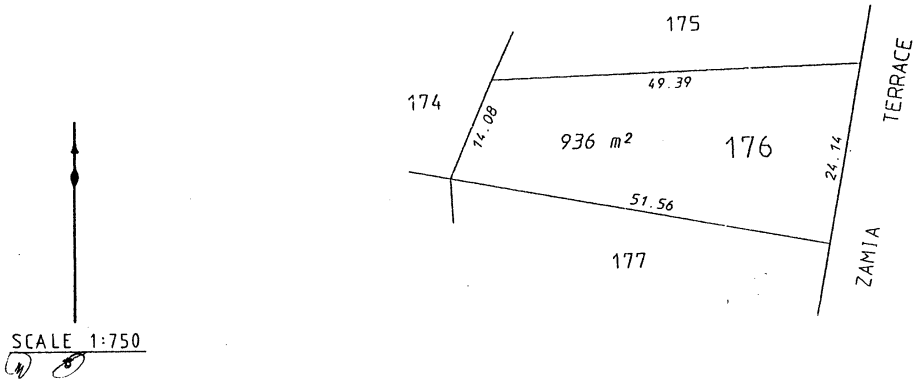

NOTE: ENTRIES MAY BE AFFECTED BY SUBSEQUENT ENDORSEMENTS.

PERSONS ARE CAUTIONED AGAINST ALTERING OR ADDING TO THIS CERTIFICATE OR ANY NOTIFICATION HEREON

Superseded - Copy for Sketch Only

LANDGATE COPY OF ORIGINAL NOT TO SCALE 25/06/2026 11:57 AM Request number: 70028251

Landgate
www.landgate.wa.gov.au

Superseded - Copy for Sketch Only

LT. 37

FIRST SCHEDULE (continued) NOTE: ENTRIES MAY BE AFFECTED BY SUBSEQUENT ENDORSEMENTS

REGISTERED PROPRIETOR	INSTRUMENT NATURE	INSTRUMENT NUMBER	REGISTERED	TIME	SEAL	CERT. OFFICER

SECOND SCHEDULE (continued) NOTE: ENTRIES MAY BE AFFECTED BY SUBSEQUENT ENDORSEMENTS

INSTRUMENT NATURE	INSTRUMENT NUMBER	PARTICULARS	REGISTERED	TIME	SEAL	CERT. OFFICER	CANCELLATION	NUMBER	REGISTERED OR LODGED	SEAL	CERT. OFFICER

CERTIFICATE OF TITLE VOL. 2110 FOL. 971

LANDGATE COPY OF ORIGINAL NOT TO SCALE 25/06/2026 11:57 AM Request number: 70028251
www.landgate.wa.gov.au
Landgate

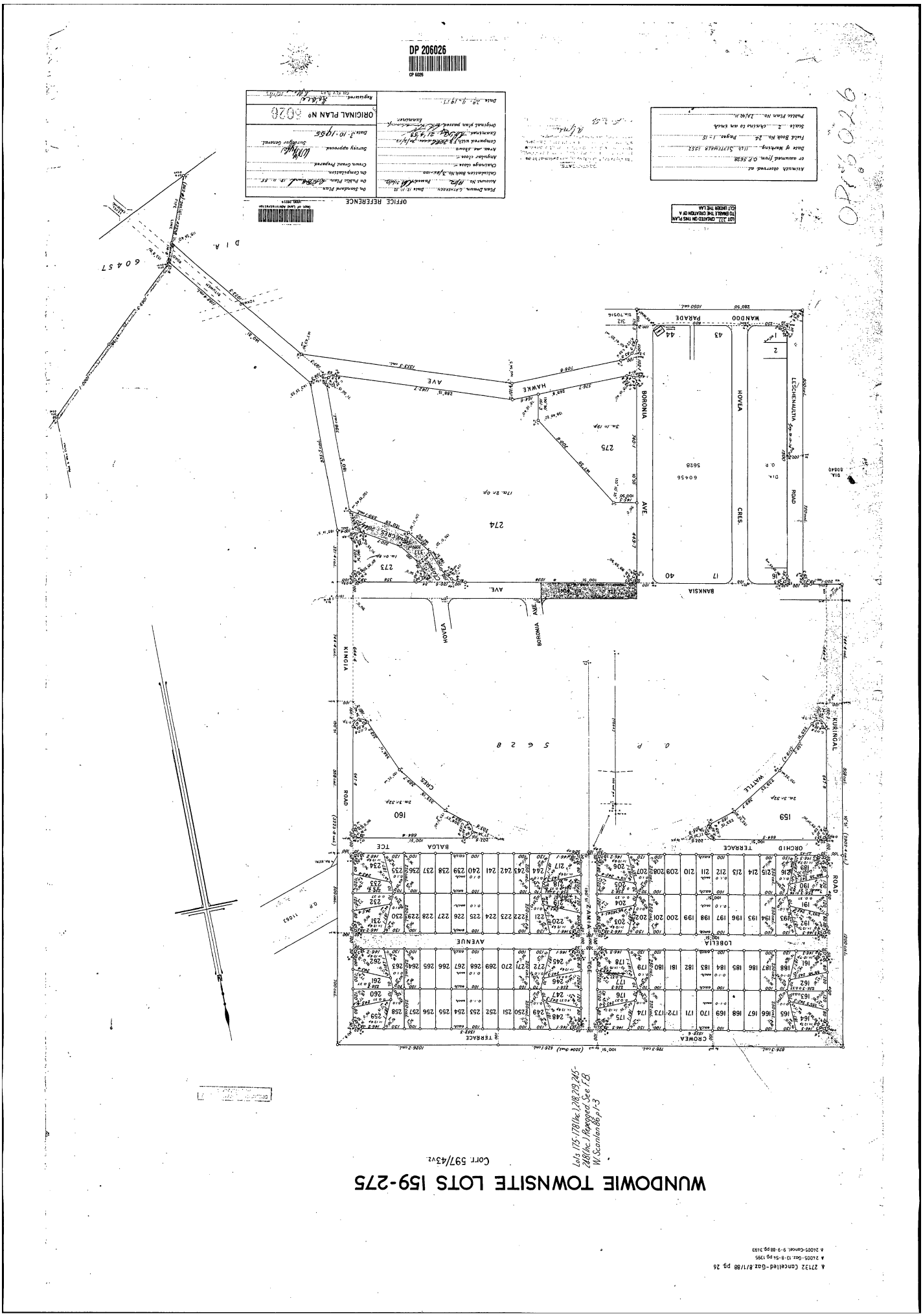

LANDGATE COPY OF ORIGINAL NOT TO SCALE 25/06/2026 11:57 AM Request number: 70028251

Landgate
www.landgate.wa.gov.au

Deposited Plan 206026

Lot	Certificate of Title	Lot Status	Part Lot
159	LR3023/167	Registered	
160	LR3158/703	Registered	
161	SP18188	Strata'd	
162	1950/795	Registered	
163	1426/51	Registered	
165	1426/52	Registered	
166	1426/53	Registered	
167	2051/774	Registered	
168	1426/55	Registered	
169	1400/612	Registered	
170	1426/56	Registered	
171	1426/57	Registered	
172	1426/58	Registered	
173	1426/59	Registered	
174	1350/478	Registered	
175	2127/78	Registered	
176	2110/971	Registered	
177	2108/139	Registered	
178	2029/74	Registered	
179	1222/519	Registered	
180	2179/71	Registered	
181	1773/703	Registered	
182	1711/941	Registered	
183	1968/391	Registered	
184	2179/72	Registered	
185	2179/73	Registered	
186	1557/187	Registered	
187	2179/74	Registered	
188	1506/963	Registered	
189	1649/337	Registered	
190	1808/679	Registered	
191	1660/820	Registered	
192	1765/499	Registered	
193	1503/169	Registered	
194	1885/273	Registered	
195	1327/406	Registered	
196	1952/407	Registered	
197	1696/119	Registered	
198	2178/199	Registered	
199	1944/837	Registered	
200	1538/993	Registered	
201	1488/16	Registered	
202	1380/820	Registered	
203	2178/200	Registered	
204	1990/630	Registered	

LANDGATE COPY OF ORIGINAL NOT TO SCALE 25/06/2026 11:57 AM Request number: 70028251

Landgate
www.landgate.wa.gov.au

Deposited Plan 206026

Lot	Certificate of Title	Lot Status	Part Lot
205	1238/556	Registered	
206	1238/556	Registered	
207	1198/911	Registered	
208	1885/628	Registered	
209	1965/280	Registered	
210	2072/979	Registered	
211	1946/293	Registered	
212	1955/591	Registered	
213	1440/396	Registered	
214	1552/432	Registered	
215	1358/52	Registered	
216	2172/872	Registered	
217	1229/898	Registered	
218	2066/545	Registered	
219	2091/989	Registered	
220	SP69626	Strata'd	
220	1259/976 (Cancelled)	Strata'd	
221	1222/570	Registered	
222	1486/76	Registered	
223	1932/105	Registered	
224	1886/209	Registered	
225	2137/413	Registered	
226	1897/428	Registered	
227	1233/510	Registered	
228	1771/285	Registered	
229	2174/634	Registered	
230	2174/635	Registered	
231	2120/695	Registered	
232	1966/744	Registered	
233	2983/328	Registered	
233	2229/191 (Cancelled)	Registered	
233	1198/143 (Cancelled)	Registered	
234	2983/329	Registered	
234	1198/143 (Cancelled)	Registered	
234	2229/191 (Cancelled)	Registered	
235	1482/962	Registered	
236	2178/170	Registered	
237	1488/49	Registered	
238	2130/388	Registered	
239	1972/102	Registered	
240	352/48A	Registered	
241	2178/171	Registered	
242	1877/594	Registered	
243	2001/244	Registered	
244	2186/843	Registered	

LANDGATE COPY OF ORIGINAL NOT TO SCALE 25/06/2026 11:57 AM Request number: 70028251

Landgate
www.landgate.wa.gov.au

Deposited Plan 206026

Lot	Certificate of Title	Lot Status	Part Lot
245	2032/559	Registered	
246	2086/568	Registered	
247	2068/513	Registered	
248	1968/412	Registered	
249	2120/36	Registered	
250	1991/472	Registered	
251	1700/694	Registered	
252	1947/741	Registered	
253	1843/69	Registered	
254	1881/367	Registered	
255	1498/299	Registered	
256	2174/636	Registered	
257	2019/969	Registered	
258	2084/919	Registered	
259	SP36528	Strata'd	
260	1832/397	Registered	
261	1483/832	Registered	
262	2128/311	Registered	
263	1492/356	Registered	
264	1492/357	Registered	
265	1492/358	Registered	
266	1492/359	Registered	
267	1492/360	Registered	
268	1492/361	Registered	
269	1492/362	Registered	
270	1492/363	Registered	
271	1492/364	Registered	
272	1492/365	Registered	
273	LR3014/87 (Cancelled)	Retired	
274	LR3014/88 (Cancelled)	Retired	
275	LR3013/305 (Cancelled)	Retired	
377	LR3014/89 (Cancelled)	Retired	

LANDGATE COPY OF ORIGINAL NOT TO SCALE 25/06/2026 11:57 AM Request number: 70028251

Landgate
www.landgate.wa.gov.au